Adjustable handles, plastic, antibacterial with internal thread, threaded insert stainless steel

Item description/product images



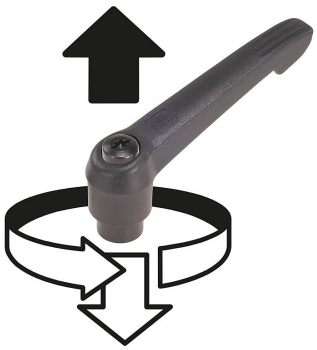

Description

Material:
Handles slate gray reinforced plastic, toothed ring die-cast zinc.
Steel parts stainless steel 1.4305.

Version:
Stainless steel bright.

Application:
The antibacterial KIPP MEDI grip products are highly effective against a variety of hazardous microorganisms, such as bacteria, fungi and even multi-resistant bacteria (e.g. MRSA).
The plastic used incorporates micro-silver particles with an antimicrobial effect to ensure effective results throughout the entire product life cycle.

Function:
The growth of harmful micro-organisms on the product surface is effectively disrupted by means of silver ions, and the existing germs on MEDI grip products are consistently reduced (as tested and confirmed by an accredited testing laboratory). During cleaning cycles the risk of infection through touching these products is significantly lower.

Benefits:
Resistant to humidity and cleaning products (during disinfection) with no toxic side effects.

Applications:
For installation on machines, equipment, plants and furnishings in areas with increased hygienic requirements (including hospitals, doctors' surgeries, rehabilitation centers and food production facilities), as well as for use in public areas or regularly frequented institutions (i.e. nursing homes or daycare centers).

© KIPP Inc.

Adjustable handles, plastic, antibacterial with internal thread, threaded insert stainless steel

Drawings

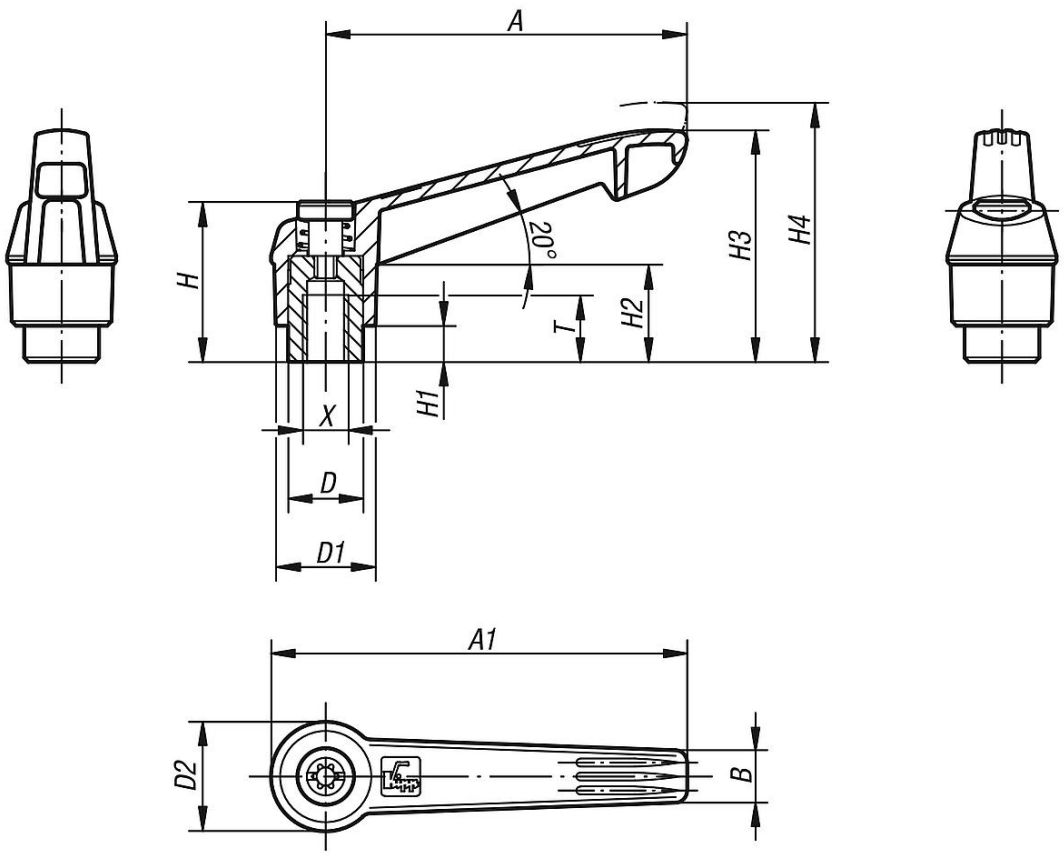

Order No.	Main color	Size	X	T	D	D1	D2	H	H1	H2	H3	H4	A	A1	B	No. of teeth
K0270.12206144	slate gray RAL 7015	2	M6	12	13,5	18	19,5	28,5	6,5	17,5	41,5	45,5	65	75	9,5	20
K0270.12208144	slate gray RAL 7015	2	M8	12	13,5	18	19,5	28,5	6,5	17,5	41,5	45,5	65	75	9,5	20

© KIPP Inc.